Querying XML: XPath and XQuery

Lecture 8a
2ID35, Spring 2013
24 May 2013

Katrien Verbert
George Fletcher

Technische Universiteit
Eindhoven
University of Technology

Where innovation starts

Slides based on lectures of Prof. T. Calders and Prof. H. Olivié

Table of Contents

1. Introduction to XML
2. Querying XML
   a) XPath
   b) XQuery

1. Introduction to XML

- Why is XML important?
  - simple open non-proprietary widely accepted data exchange format
- XML is like HTML but
  - no fixed set of tags
    - X = “extensible”
  - no fixed semantics (c.q. representation) of tags
    - representation determined by separate ‘style sheet’
    - semantics determined by application
  - no fixed structure
    - user-defined schemas

XML-document – Running example 1 (1/2)

```
<?xml version ="1.0"?>
<university>
     <department>
          <dept_name>Comp. Sci.</dept_name>
          <building>Taylor</building>
          <budget>100000</budget>
     </department>
     <course>
          <course_id>CS-101</course_id>
          <title>Intro to Comp. Science</title>
          <dept_name>Comp. Sci.</dept_name>
          <credits>4</credits>
     </course>
. . .
```

XML-document – Running example 1 (2/2)

```
. . .
    <instructor Id="10101">
        <name>Srinivasan</name>
        <dept_name>Comp. Sci.</dept_name>
        <salary>65000</salary>
        <teaches>CS-101</teaches>
    </instructor>
</university>
```

Elements of an XML Document

- **Global structure**
  - **Mandatory first line**

```
<?xml version ="1.0"?>
```

  - **A single root element**

```
<university>
        . . .
</university>
```

- **Elements have a recursive structure**
  - **Tags are chosen by author;**

    <department>, <dept_name>, <building>

  - **Opening tag must have a matching closing tag**

    <university></university>, <a></a>

Elements of an XML Document

- The content of an element is a sequence of:
  - Elements

    `<instructor> … </instructor>`
  - Text

    `Jan Vijs`
  - Processing Instructions

    `<! . . . !>`
  - Comments

    `<!- This is a comment --!>`
- Empty elements can be abbreviated:

  `<instructor/>` is shorthand for

  `<instructor></instructor>`

Elements of an XML Document

- **Elements can have attributes**

```
<Title Value="Student List"/>

<PersonList Type="Student" Date="2004-12-12">
   . . .
</Personlist>
```

Attribute_name = "Value"

Attribute name can only occur once

Value is always quoted text (even numbers)

Elements of an XML Document

- Text and elements can be freely mixed

```
<Course ID="2ID45">
        The course <fullname>Database
        Technology</fullname> is lectured
        by <title>dr.</title>
        <fname>George</fname>
        <sname>Fletcher</sname>
</Course>
```

- The order between *elements* is considered important
- Order between attributes is not

Well-formedness

- **We call an XML-document well-formed iff**
  - **it has one root element;**
  - **elements are properly nested;**
  - **any attribute can only occur once in a given opening tag and its value must be quoted.**

- **Check for instance at:**
  http://www.w3schools.com/xml/xml_validator.asp

Table of Contents

1. Introduction to XML
2. Querying XML
   a) Xpath
   b) XQuery

Querying and Transforming XML Data

- **XPath**
  - **Simple language consisting of path expressions**
- **XQuery**
  - **Standard language for querying XML data**
  - **Modeled after SQL (but significantly different)**
  - **Incorporates XPath expressions**

Tree Model of XML Data

- Query and transformation languages are based on a tree model of XML data
- An XML document is modeled as a tree, with nodes corresponding to elements and attributes
  - Element nodes have children nodes, which can be attributes or subelements
  - Text in an element is modeled as a text node child of the element
  - Children of a node are ordered according to their order in the XML document
  - Element and attribute nodes (except for the root node) have a single parent, which is an element node
  - The root node has a single child, which is the root element of the document

Tree Model of XML Data (Cont)

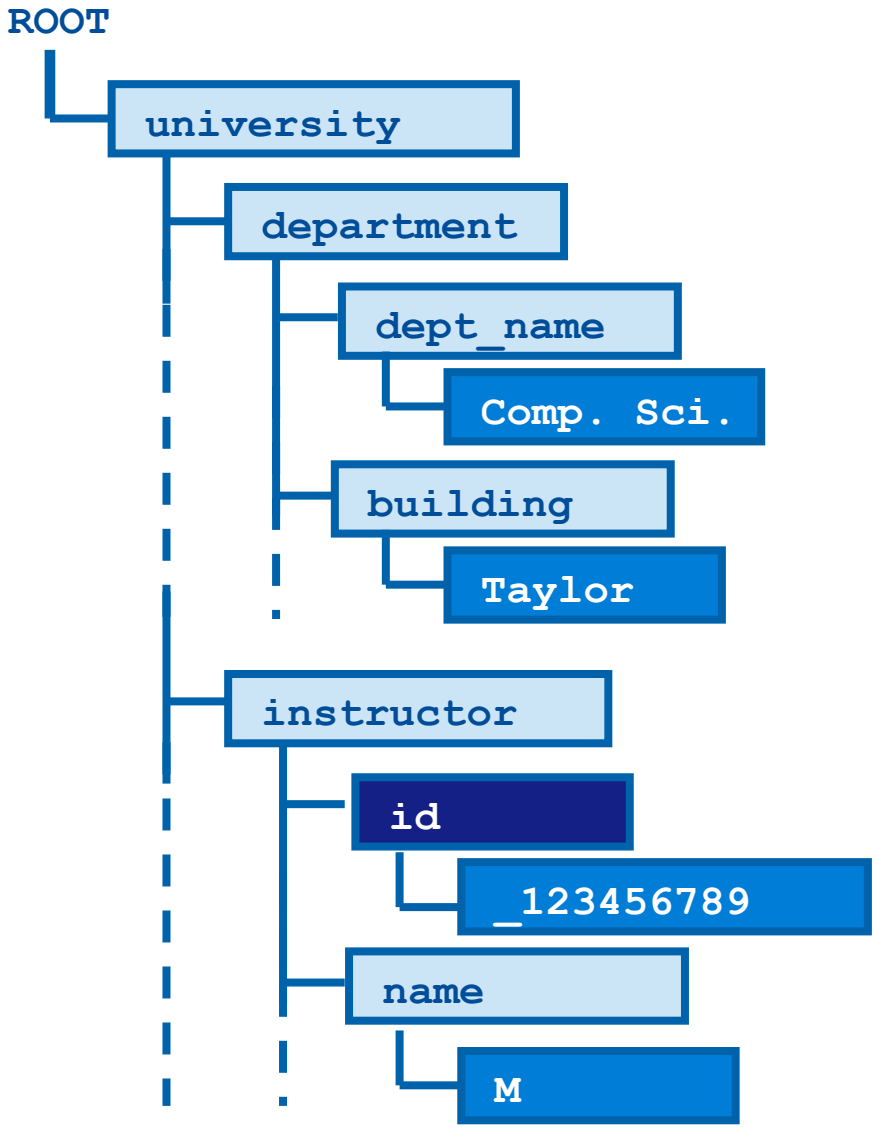

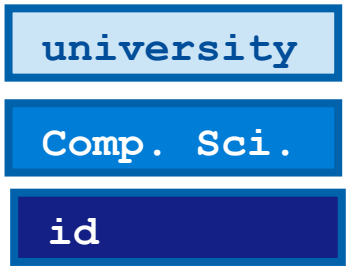

Element node

Text node

Attribute node

XPath

- XPath is used to address (select) parts of documents using path expressions
- A path expression is a sequence of steps separated by "/"
  - Think of file names in a directory hierarchy
- Result of path expression: set of values that along with their containing elements/attributes match the specified path

XPath example

/university/instructor

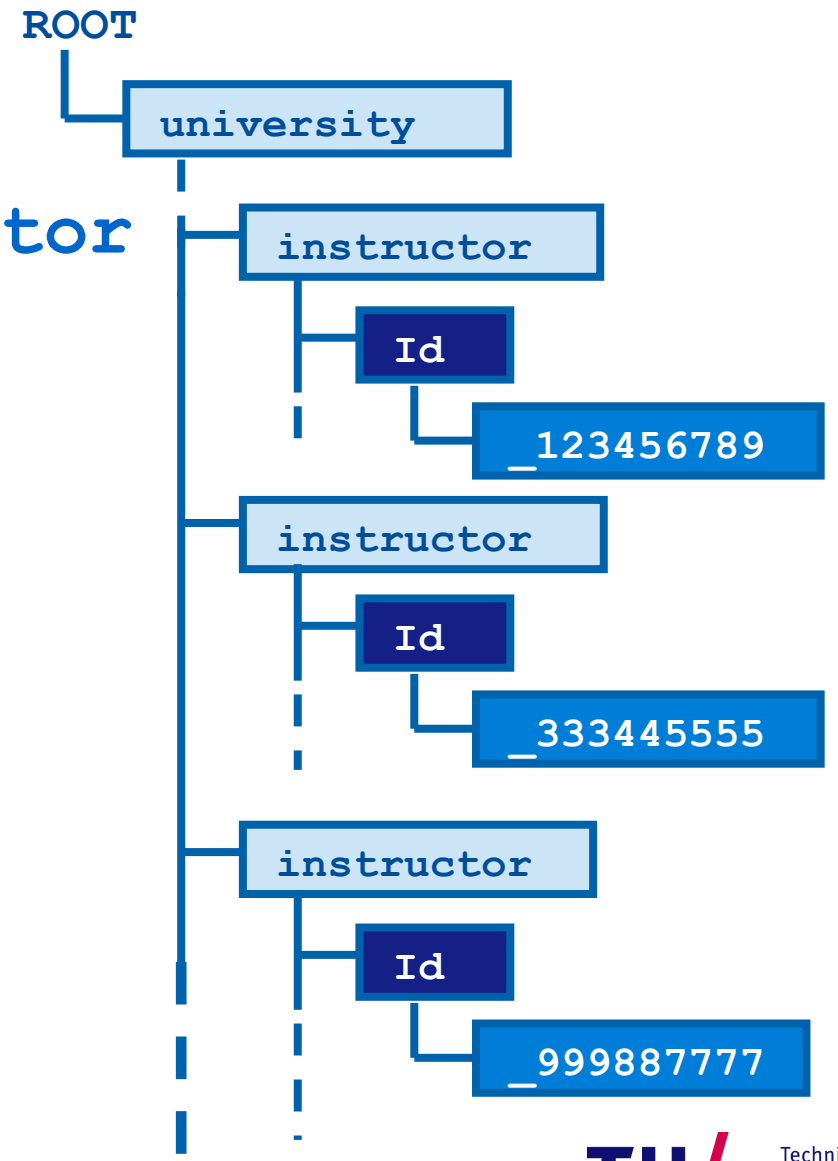

XPath (example)

/university/instructor

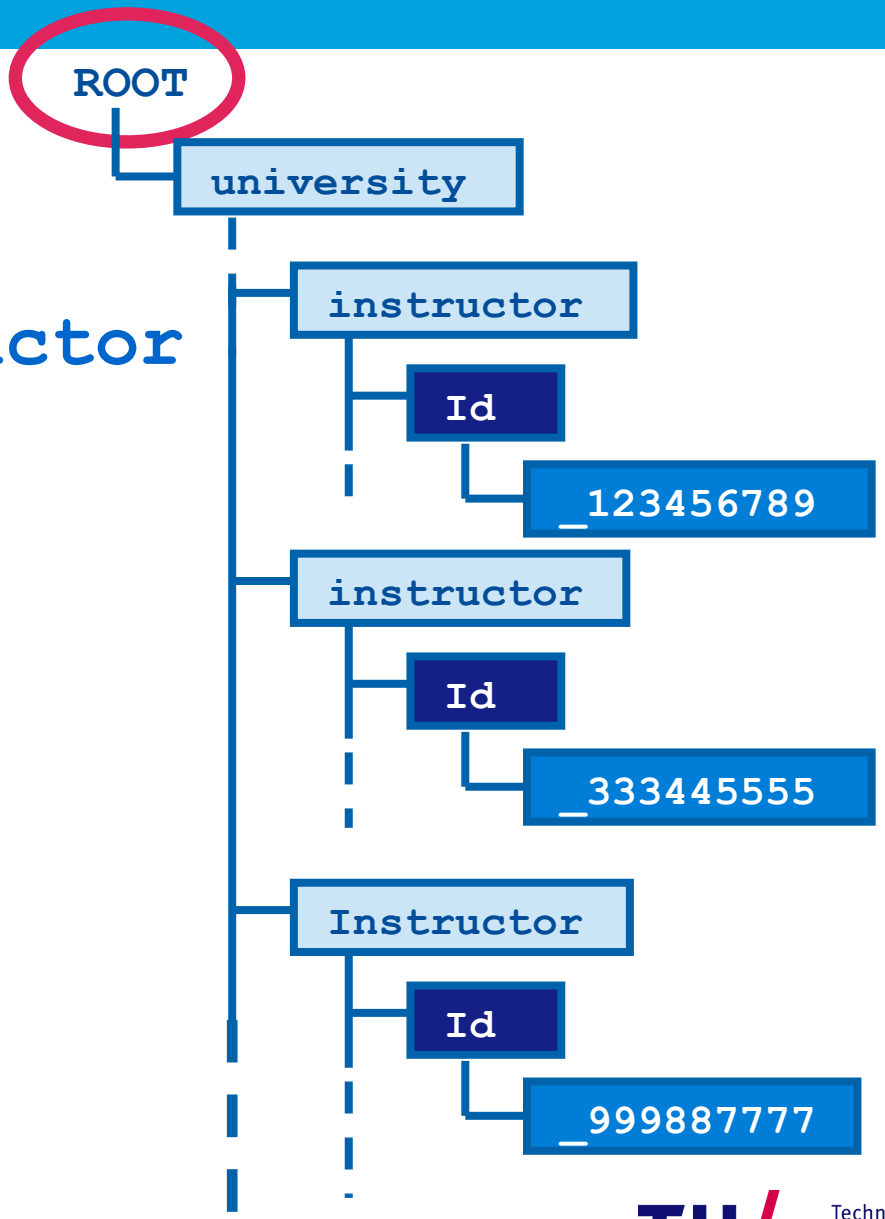

XPath (example)

/university/
instructor

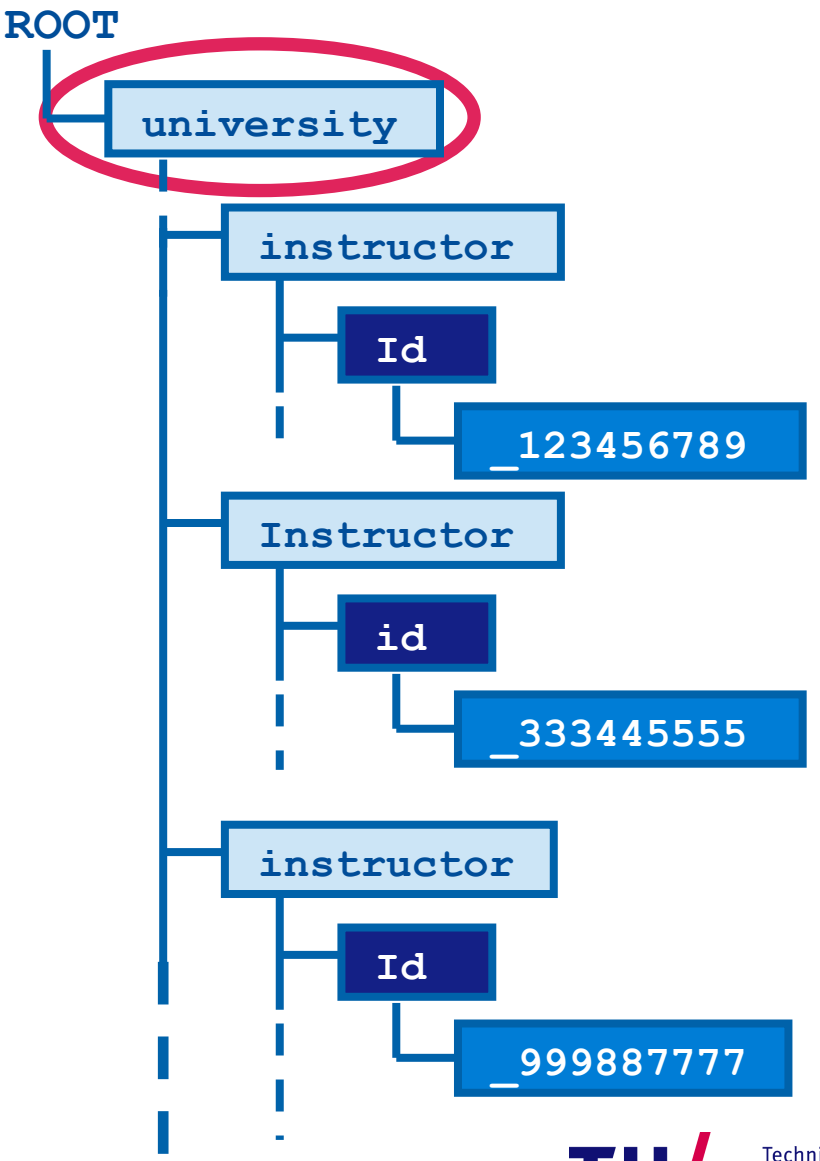

XPath (example)

/university/instructor

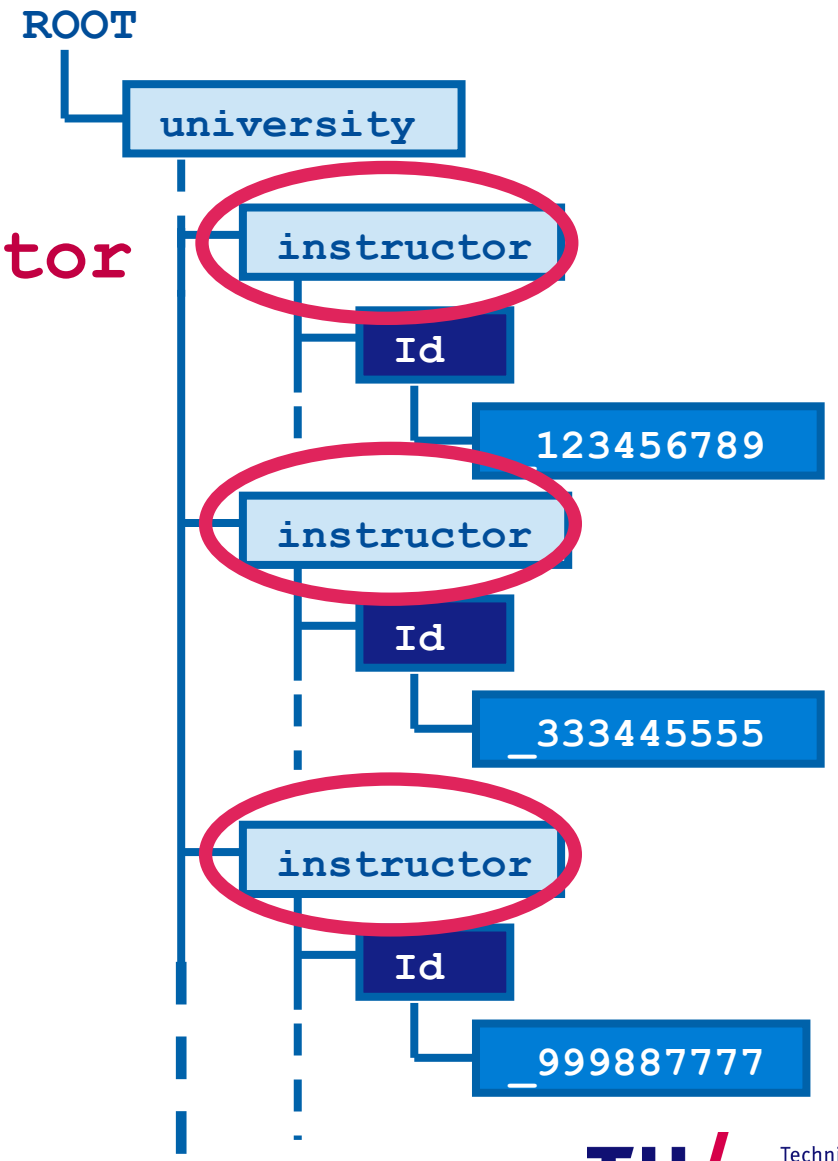

XPath (example)

/university/instructor

↓

```
<instructor Id="_123456789”>
  <name>Paul De Bra</name>
     ....
</instructor>
<instructor Id="_333445555”>
  <name>George Fletcher</name>
     …..
</instructor>
<instructor Id="_999887777”>
  <name>Katrien Verbert</name>

.....
```

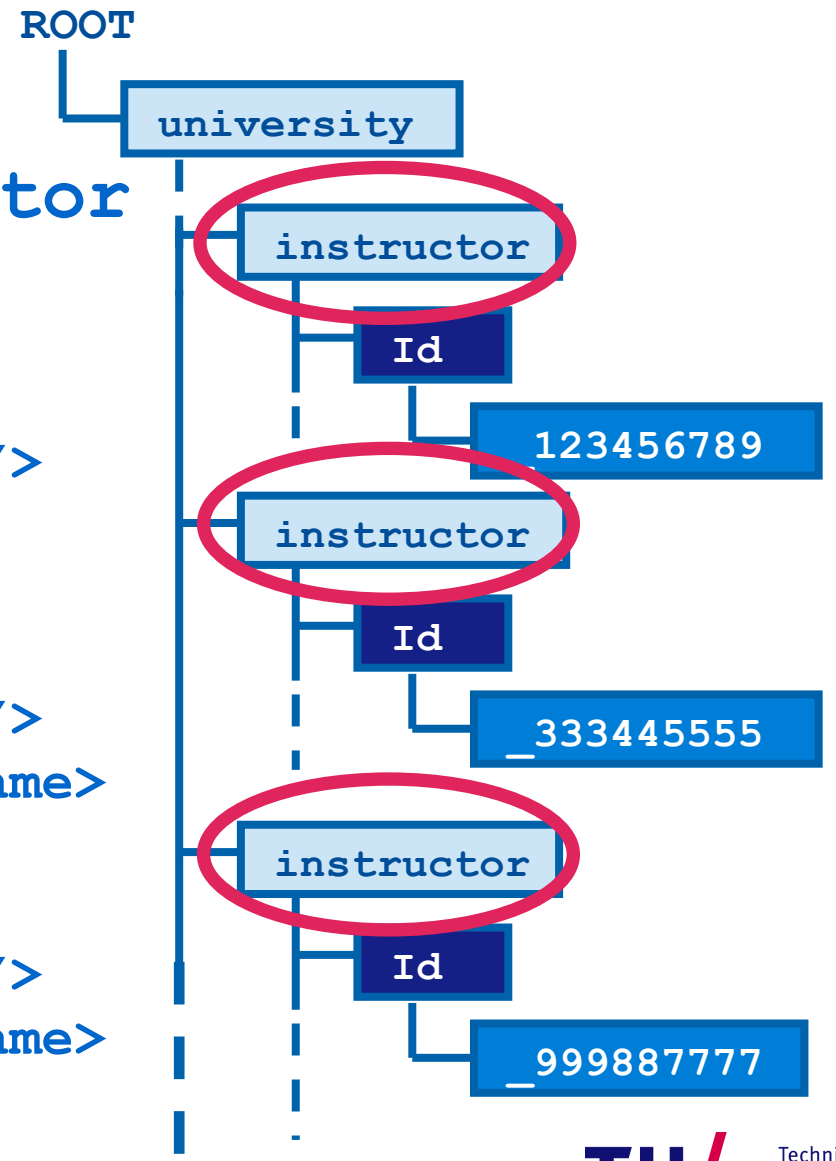

XPath (Cont.)

- The initial "/" denotes root of the document (above the top-level tag)
- Path expressions are evaluated left to right
  - Each step operates on the set of instances produced by the previous step
- Selection predicates may follow in [ ]
  - E.g. `/university/instructor[salary > 40000]`
    - returns instructor elements with a salary value greater than 40000
  - Attributes are accessed using "@"
  - E.g. `/university/instructor[salary > 40000]/@Id`
    - returns the Ids of the instructors with salary greater than 40000

Q1: give XPath expression

Retrieve instructor with Id _123456789

/university/instructor[@Id="_123456789"]

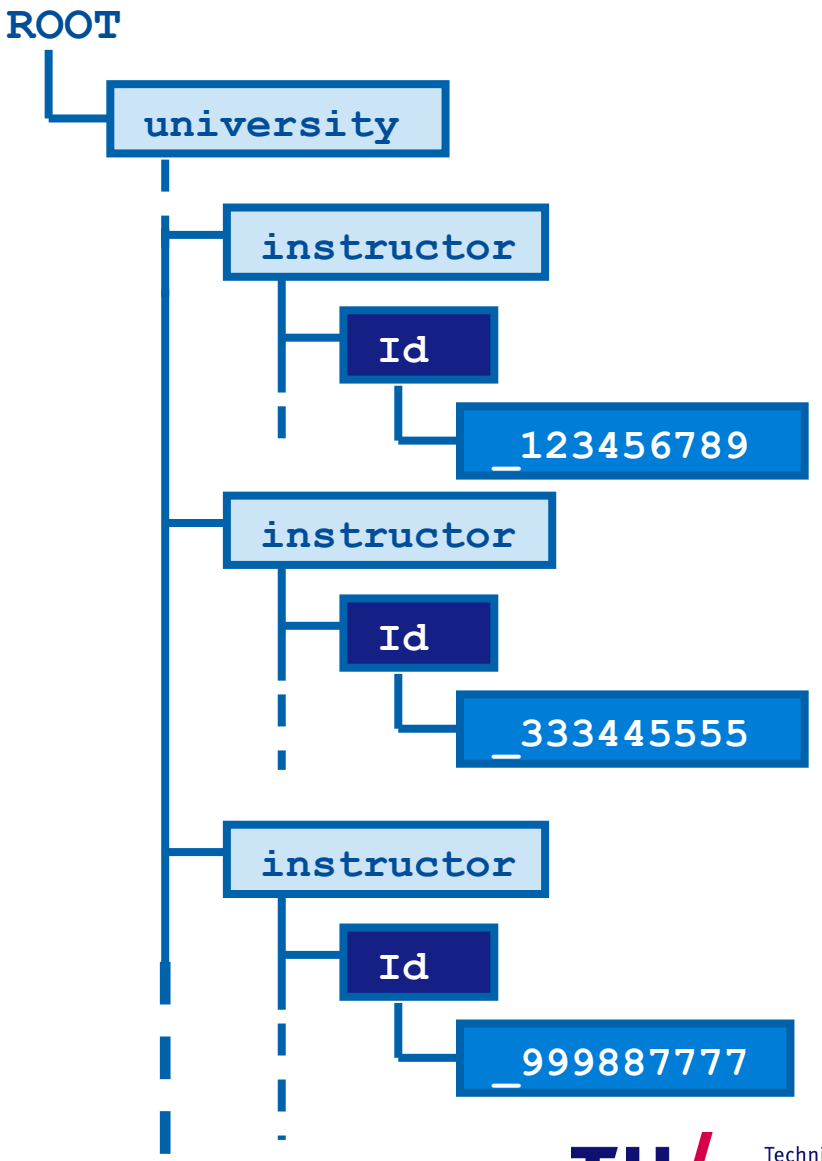

Technische Universiteit Eindhoven University of Technology

Functions in XPath

- **XPath provides several functions**

  The function count() takes a nodeset as its argument and returns the number of nodes present in the nodeset.

  E.g. `/university/instructor[count(teaches) = 3]`

  Returns instructors who are involved in 3 courses

- **Function not() can be used in predicates**
  - `//instructor[not(teaches)]`

More XPath Features

- Operator or used to implement union
  - E.g. `//instructor[count(teaches) = 1 or not (teaches)]`

    gives instructors with either 0 or 1 courses
- "//" can be used to skip multiple levels of nodes
  - E.g. `/university//name`
    - finds any name element anywhere under the /university element, regardless of the element in which it is contained.
- A step in the path can go to:

  parents, siblings, ancestors and descendants of the nodes generated by the previous step, not just to the children
  - "//", described above, is a short from for specifying "all descendants"
  - ".." specifies the parent.
    - e.g. : `/university//name/../salary`

Q2: Give XPath Expression

Give a list of courses that are lectured at the computer science department and that have at least 4 credits.

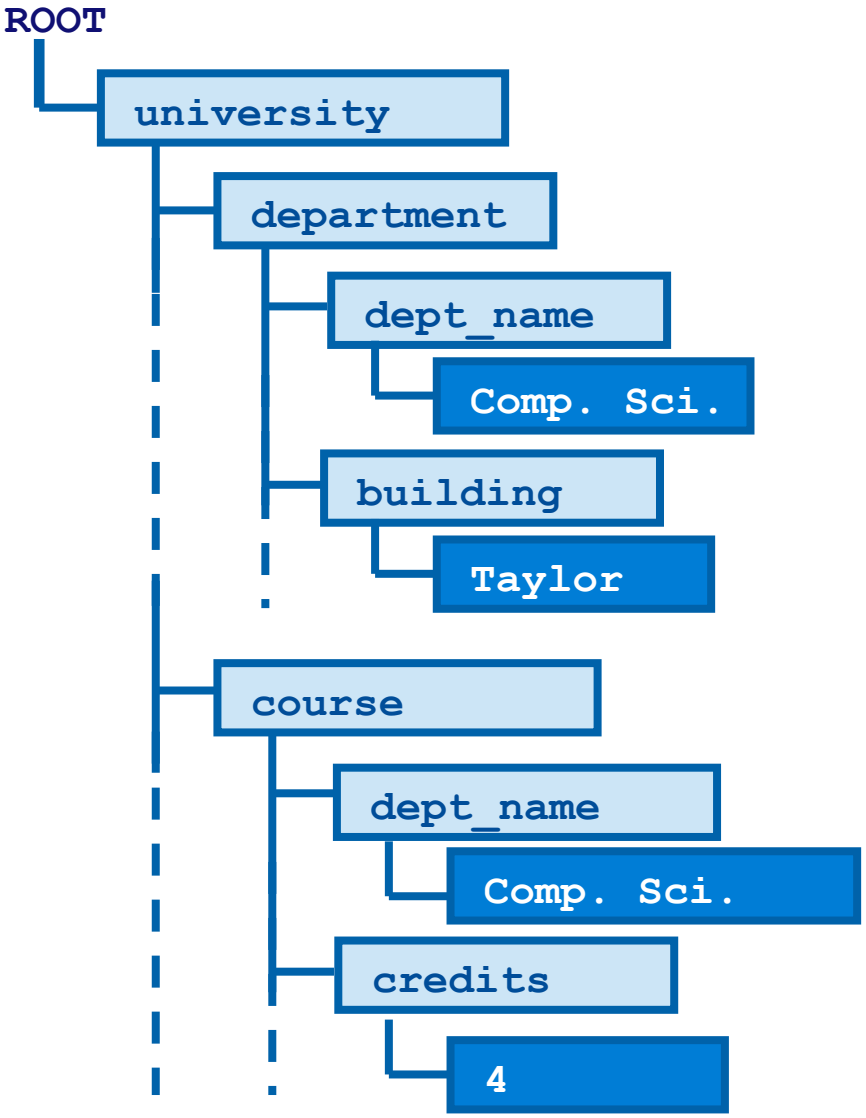

XPath as a Query Language for XML

- XPath can be used directly as a retrieval language
  - Select and return nodes in an XML document
  - However, XPath cannot:
    - Restructure,
    - Reorder,
    - Create new elements

- Therefore, there are other query languages that use XPath as a component
  - E.g., XQuery → Does allow restructuring

Where to find more information?

- **XPath reference by 3WC:**

  http://www.w3.org/TR/xpath/

- **Try out some queries yourself:**

  http://en.wikipedia.org/wiki/XML_database

- **BaseX is nice for educational purposes**

  http://www.inf.uni-konstanz.de/dbis/basex/

XQuery

- Allows to formulate more general queries than XPath
- General expression: FLWOR expression

  FOR < for-variable > IN < in-expression >

  LET < let-variable > := < let-expression>

  [WHERE < filter-expression>]

  [ORDER BY < order-specification >]

  RETURN < expression>

  - note: FOR and LET can be used together or in isolation

Example: retrieve the name of instructors who have a salary that is higher than 30000

```
for $x in doc(”university.xml")/university/instructor
where $x/salary>30000
return <instr> {$x/name} </instr>
```

Q3: Give XQuery Expression

Give a list of courses that are lectured at the computer science department and that have at least 4 credits.

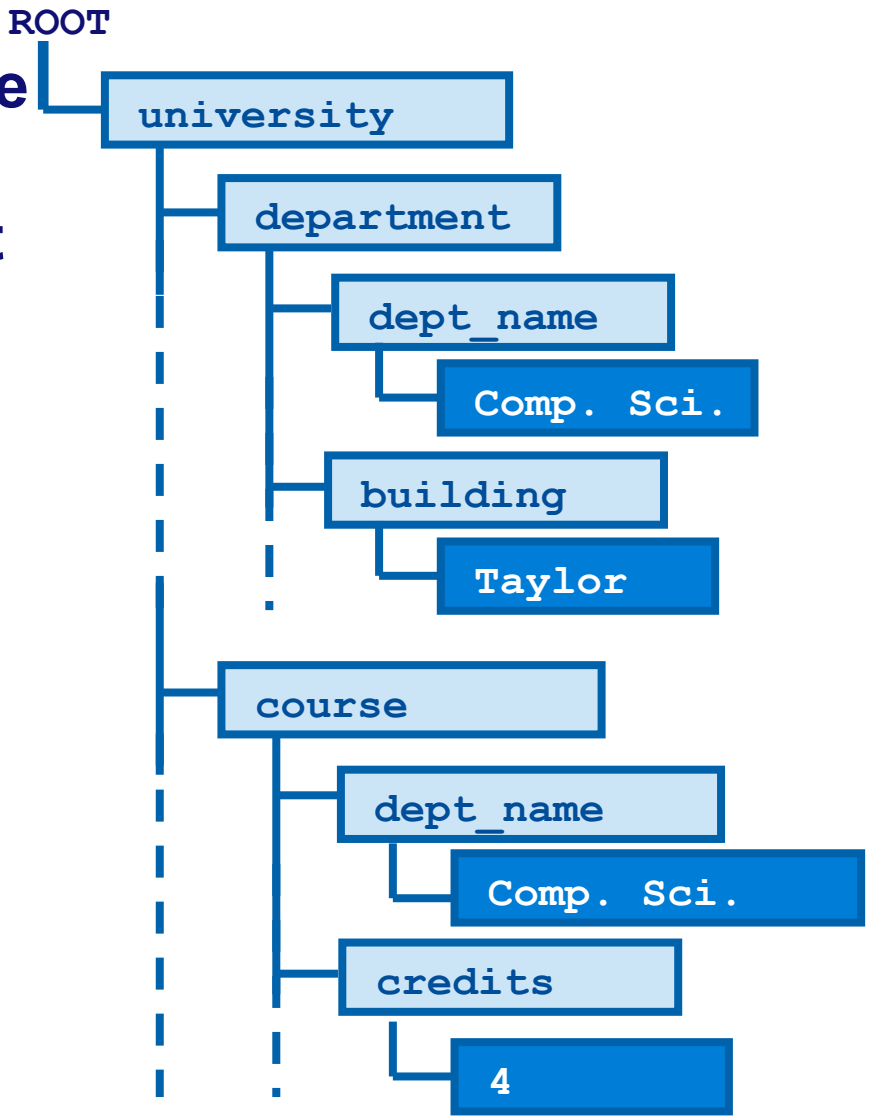

Syntax:

FOR < for-variable > IN < in-expression >

LET < let-variable > := < let-expression>
[WHERE < filter-expression>]

[ORDER BY < order-specification >]

RETURN < expression>

Joins

```
for $c in /university/course,
    $i in /university/instructor
where $c/course_id=$i/teaches
return <course_instructor> { $c $i } </course_instructor>
```

FLWOR Expression

- **A FLWOR expression binds some variables, applies a predicate and constructs a new result.**

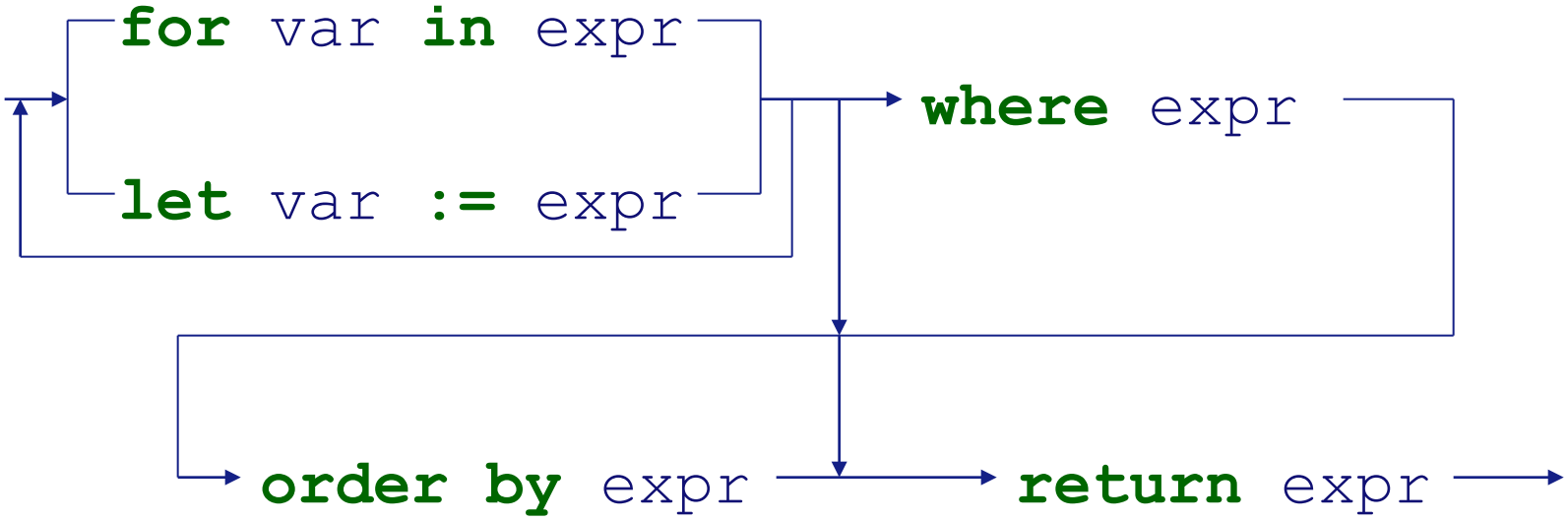

FLWOR Expression

- **A FLWOR ex ome variables, applies a predicate a ew**

Anything that creates a sequence of items

Anything that creates true or false

```
for var in expr
let var := expr
where expr
order by expr
return expr
```

Anything that creates a sequence atomic values

Any XQuery Expression

FLWOR Expression

- **FOR clause**

```
for $c in document("university.xml")
                                  //courses,
  $i in document("university.xml")
                                //instructor
```

  - specify documents used in the query
  - declare variables and bind them to a range
  - result is a list of bindings

- **LET clause**

```
let $id := $i/@Id,
    $cn := $c/name
```

  - bind variables to a value

FLWOR Expression

- **WHERE clause**

```
where $c/@CrsCode =
            $t/CrsTaken/@CrsCode and
      $c/@Semester =
            $t/CrsTaken/@Semester
```

  - selects a sublist of the list of bindings

- **RETURN clause**

```
return
    <CrsStud>
       {$cn} <Name> {$sn} </Name>
    </CrsStud>
```

  - construct result for every selected binding

Nested queries

```
<university-1>
{
        for $d in /university/department
        return
            <department>
                { $d/* }
                {for $c in /university/course[dept_name=
                  $d/dept_name] return $c}
            </department>
}
</university-1>
```

Aggregate functions

```
for $d in /university/department
return
        <department_total_salary>
                <dept_name>{$d/dep_name}</dept_name>
                <total_salary>{fn:sum(
                        for $i in /university/instructor[dept_name=$d/dept_name]
                        return $i/salary
        )} </total_salary>
        </department_total_salary>
```

Q4: Retrieve the total budget of the university.

```
for $i in /university/
department
return fn:sum($i/budget)
```

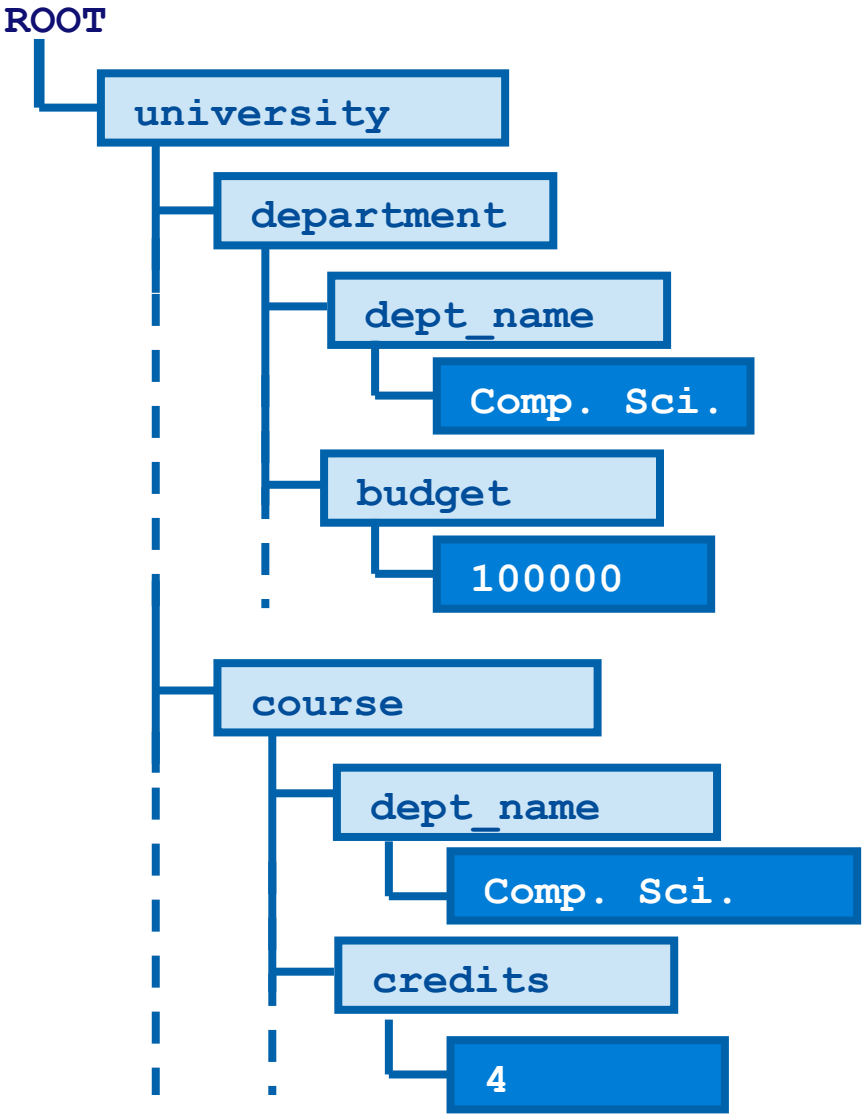

Sorting

```
for $i in /university/instructor
order by $i/name descending
return <instructor>{$i/*}</instructor>
```

XQuery Expressions: Operators

- = compares the *content* of an item
  - Content of an element = concatenation of all its text-descendants in document order
  - Content of an atomic value = the atomic value
  - Content of an attribute = its value

Examples:

```
<a/> = <b/>,
<d><a/><c>2</c></d> = <b>2</b>,
<a></a>=<c>3</c>
```

Result:

```
true, true, false
```

XQuery Expressons: Built-in Functions

- Functions on sequences of *nodes*; result in doc. order without dupl.
  - `union intersect except`
- Functions returning values
  - `empty()` true if empty sequence
  - `count()` number of items in the sequence
  - `data()` sequence of the values of the nodes
  - `distinct-values()` sequence of the values of the nodes, without duplicates

XQuery Expressons: Built-in Functions

- On nodes
  - `string()` value of the node
- On strings
  - `contains()` true if first string contains second
  - `ends-with()` true if second string is suffix of first
- On sequences of integers:
  - `min(), max(), avg()`

XQuery Expressions: Choice

- `if (`*`condition`*`) then `*`expression`*` else `*`expression`*

- `if (not(empty(./author[3])))`
  `then "et al."`
  `else "."`

User-defined functions

- **Body can be any XQuery expression, recursion is allowed**

```
declare function local:fname
                        ($var1, …, $vark) {
  XQuery expression
  possibly involving fname itself again
};
```

User-defined functions

- **Count number of descendants**

```
declare function local:countElemNodes($e) {
  if (empty($e/*)) then 0
  else local:countElemNodes($e/*)+count($e/*)
};

local:countElemNodes(<a><b/><c>Text</c></a>)
```

- **Result : 2**

Existential and universal quantification

- existential quantification

  some $e in path satisfies P

- universal quantification

  every $e in path satisfies P

Example. Find departments where every instructor has a salary greater than $50,000

```
for $d in /university/department
where every $i in /university/instructor[dept_name=$d/
                                                dept_name]
      satisfies $i/salary>50000
return $d
```

Q5: Give for every course the id and title of the course and the names of the lecturers

```
for $i in //course
return <course> {$i/course_id} {$i/title}
        {for $j in //instructor
        where $i/course_id=$j/teaches
        return $j/name}
</course>
```

Q6: Give the names of instructors at the university, not including duplicates.

```
for $i in //instructor
return <inst> {distinct-values($i/name)}</inst>
```

Q5: Give the name of the instructor who is involved in most courses.

```
for $inst in //instructor
let $i:=max(/count(//instructor/teaches))
where count($inst/teaches)=$i
return $inst/name
```

More Information?

- **Many many examples: XML XQuery Use Case**

http://www.w3.org/TR/xquery-use-cases/

Thank you!
Questions?

k.verbert@tue.nl
g.h.l.fletcher@tue.nl